Gantry Style Crane preliminary concept layouts.
Existing Structures, Shoring, and other elements have not been evaluated to accomodate this concept.

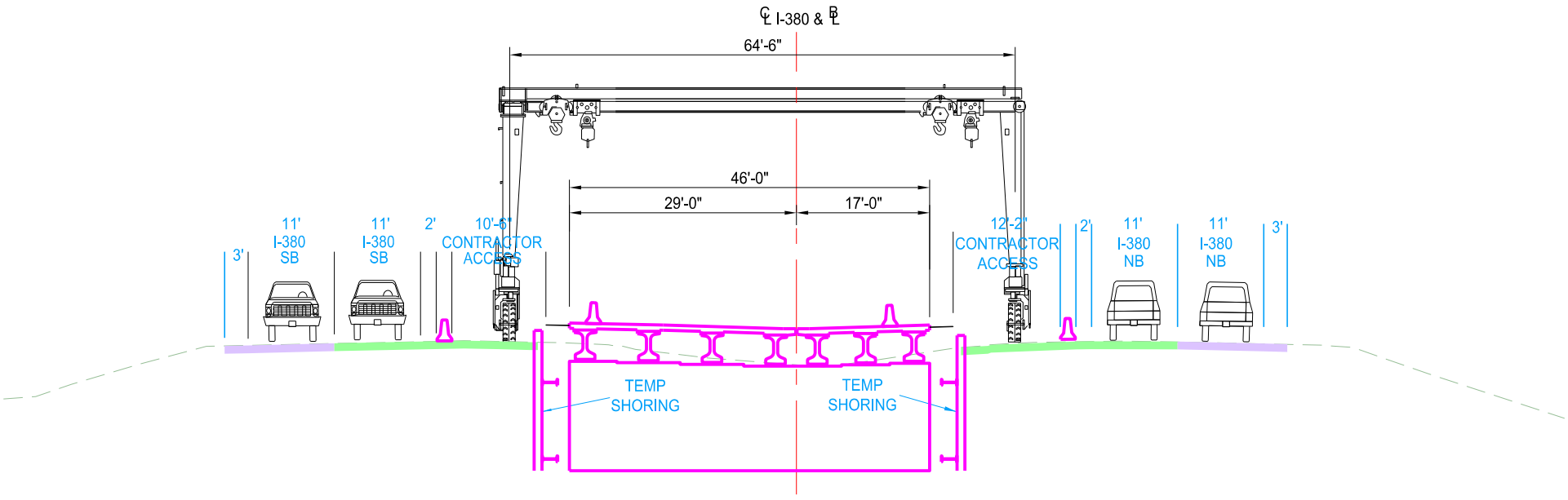

ROADWAY STAGE 3A (FY2020 & FY2021)
I-380 OVER RAMPS G & E

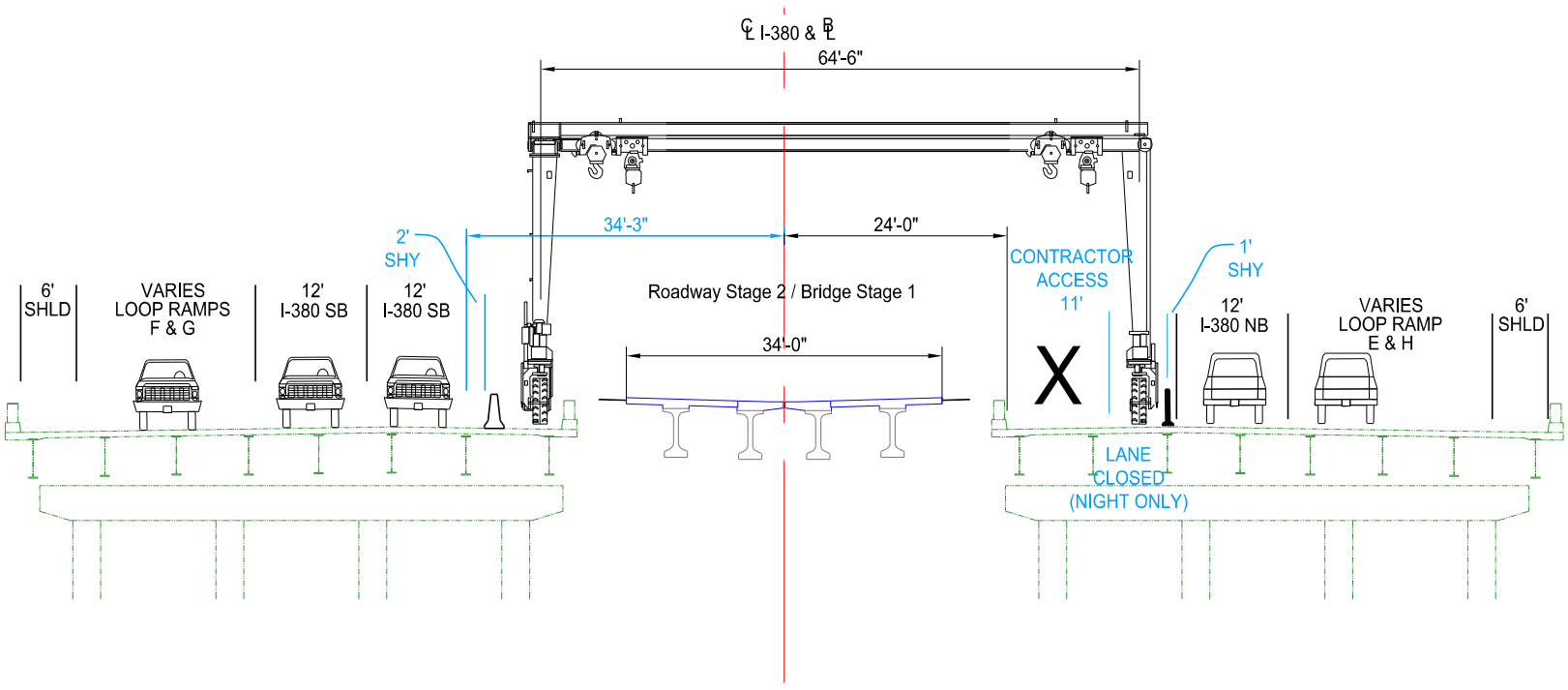

ROADWAY STAGE 2 (FY 2020)
I-380 (US 218) OVER I-80

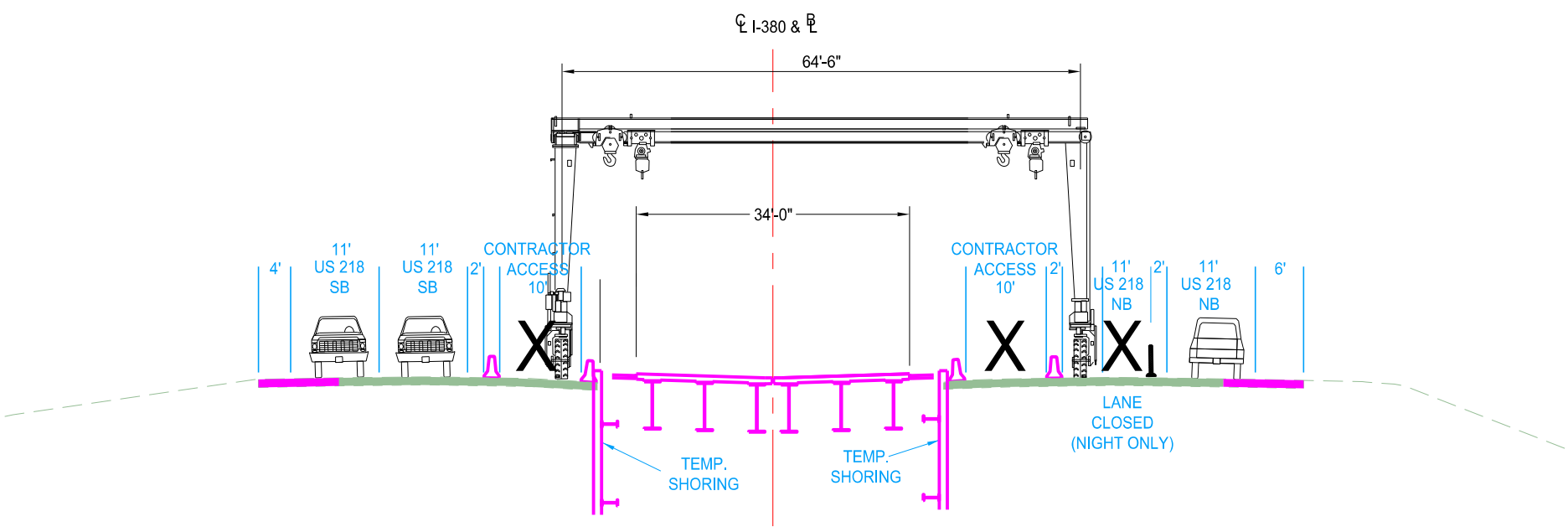

ROADWAY STAGE 2 & 3A (FY2020 & FY2021)
US 218 OVER PROP RAMP F

GANTRY CRANE OPTION
US 218 / I-380 BRIDGES

(SHEET 1 OF 2)

plotted: 3/21/2018 4:50:28 PM
MODEL: 010_I-380 Bridge GANTRY CRANE TYPS
filename: STG_52080235_HDR_Bridge_Constructability_SECTIONS.dgn

Gantry Style Crane preliminary concept layouts.
Existing Structures, Shoring, and other elements have not been evaluated to accomodate this concept.

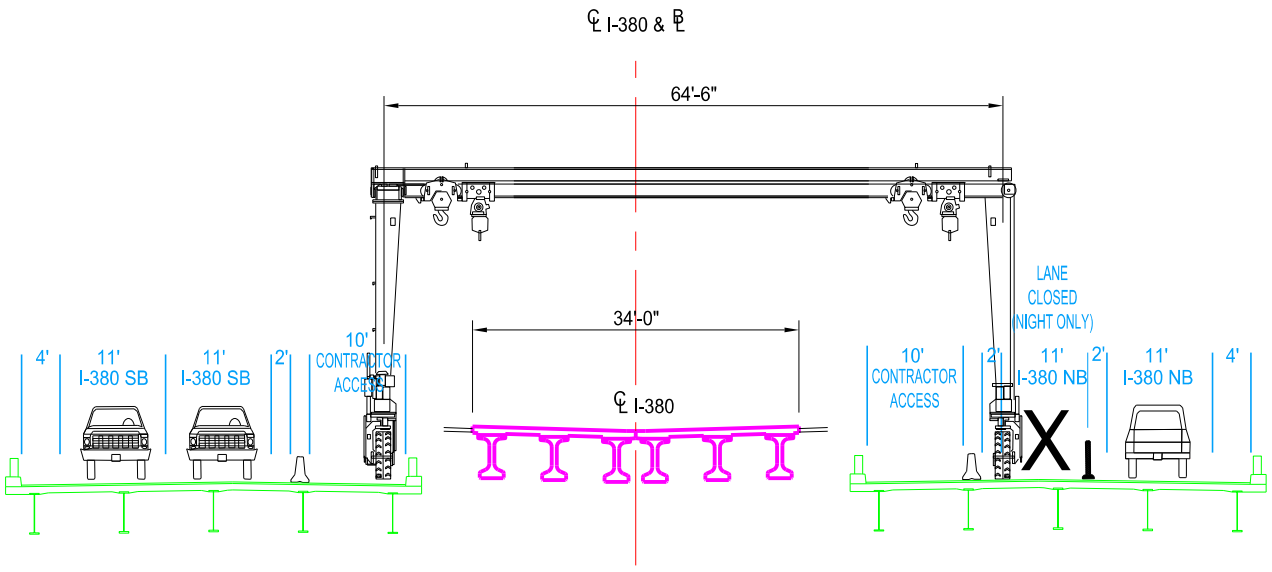

ROADWAY STAGE 2 & 3A (FY2020 & FY2021)
I-380 OVER US 6

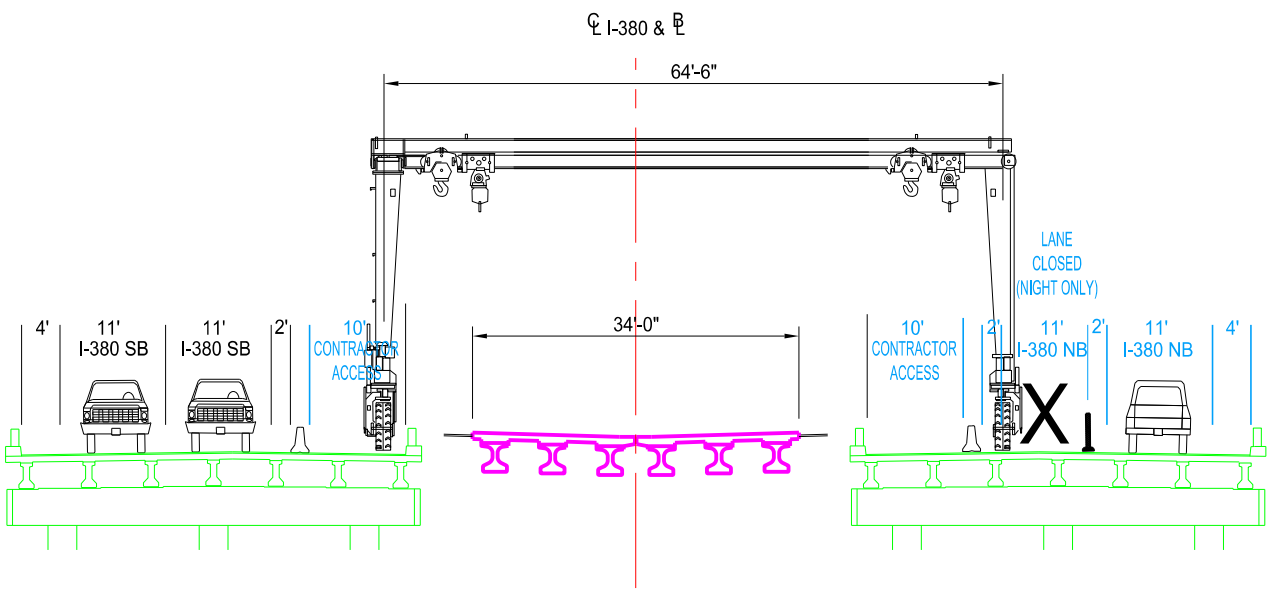

STAGE 2 & 3A (FY2020 & FY2021)
I-380 OVER RR

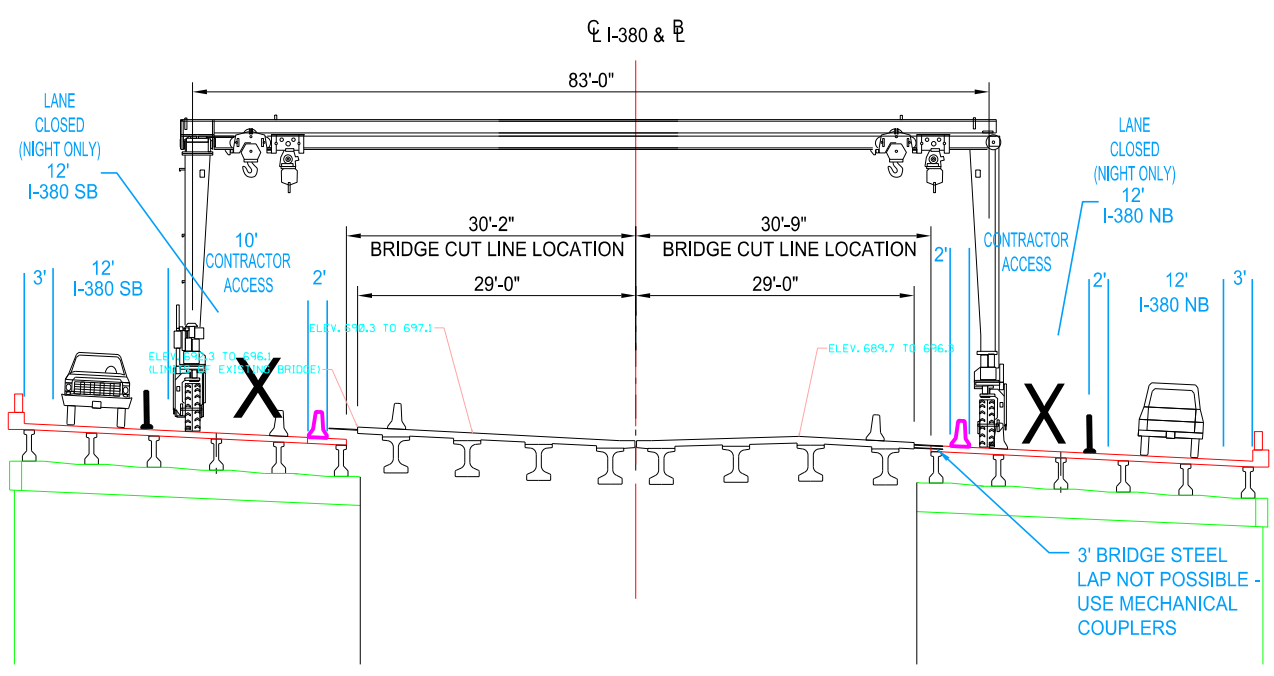

ROADWAY STAGE 3A (FY2021)
I-380 OVER CLEAR CREEK

GANTRY CRANE OPTION
US 218 / I-380 BRIDGES

(SHEET 2 OF 2)

plotted: 3/21/2018 5:00:33 PM
MODEL: 010_I-380 Bridge GANTRY CRANE TYPS
filename: STG_52080235_HDR_Bridge_Constructability_SECTIONS.dgn